Product Information

LED Superstar MR16 35

Product Overview

Product	Wattage	CCT	lm	Beam Angle	Base
LED Superstar MR163524 4.6W/827 12V GU5.3	4.6	2700K	350[1]	24°	GU5.3
LED Superstar MR163524 4.6W/830 12V GU5.3	4.6	3000K	350	24°	GU5.3
LED Superstar MR163536 4.6W/827 12V GU5.3	4.6	2700K	350	36°	GU5.3
LED Superstar MR163536 4.6W/830 12V GU5.3	4.6	3000K	350	36°	GU5.3
LED Superstar MR163536 4.6W/865 12V GU5.3	4.6	6500K	350	36°	GU5.3

Benefits

•Free of multiple shadows for an excellent accent lighting
•Dimming towards your ideal ambience
•Up to 85% Energy Saving, spend little and save a lot
•Consistent lighting color avoids the color difference
•Install and forget: assured by Germany quality standard

Key Features

•Uniform and clean beam thanks to the innovative Fresnel optics
•Excellent transformer and dimmer compatibility
•High-quality replacement of 35W/50W halogen lamp
•Color consistency: <5 Standard Deviation Color Matching
•25,000 hours lifetime[2]
•12VAC input voltage
•UV and NIR radiation free
•Mercury free

[1] Typical values. All the technical parameters apply to the entire lamp. In view of the complex manufacturing process for light emitting diodes, the typical values given above for the technical LED parameters are merely statistical values that do not necessarily correspond to the actual technical parameters of an individual product; individual products may vary from the typical values.

[2] The average lifetime of LED lamps is defined as the number of hours when the light output of 50% of a large group of identical lamps goes below 70% of its initial luminous flux (L70B50, IEC60969).The lifetime is estimated at room temperature (25° C), free air burning, base up burning position and at rated voltage.

For lamps with a weight significantly higher than that of the lamps for which they are a replacement, attention should be drawn to the fact that the increased weight may reduce the mechanical stability of certain luminaires and lampholders and may impair contact making and lamp retention.

Product Information

LED Superstar MR16 35

Ordering Guide

Product	Wattage	CCT	lm	Candela	Diameter	Length	Weight	Beam Angle	EAN10	EAN40 (ship.unit)	Ship. unit
LED Superstar MR163524 4.6W/827 12V GU5.3	4.6	2700K	350	1596cd	49.6mm	53.7mm	52g	24°	4052899395312	4052899395329	10
LED Superstar MR163524 4.6W/830 12V GU5.3	4.6	3000K	350	1596cd	49.6mm	53.7mm	52g	24°	4052899395343	4052899395350	10
LED Superstar MR163536 4.6W/827 12V GU5.3	4.6	2700K	350	924cd	49.6mm	53.7mm	52g	36°	4052899395411	4052899395428	10
LED Superstar MR163536 4.6W/830 12V GU5.3	4.6	3000K	350	924cd	49.6mm	53.7mm	52g	36°	4052899395442	4052899395459	10
LED Superstar MR163536 4.6W/865 12V GU5.3	4.6	6500K	350	924cd	49.6mm	53.7mm	52g	36°	4052899395473	4052899395480	10

Common Characteristics[3]

Type	Average lifetime[3]	Switching cycles (30s on, 30s off)	Casing material	Starting time	Warm up time for 60% light	Power factor
Superstar MR16 35	25,000hrs	100,000	Plastics	0.1s	<0.5s	0.9

Type	Nominal current	Tc temperature max.5	CRI	Mercury max.
Superstar MR16 35	410mA	77° C	80	0.0 mg

Disposal information

- Lamps with WEEE sign can be returned at specific collection points.
- LED lamps have to be disposed as special waste.

[3] The Tc is defined as the highest permissible temperature which may occur on the outer surface of the LED lamp (in the indicated position) under normal operating conditions and at the rated voltage/current/power or the maximum of the rated voltage/current/power range (DIN EN 62031: 2009-01)

Product Information

LED Superstar MR16 35

Light distribution

LED Superstar MR16 35 24D

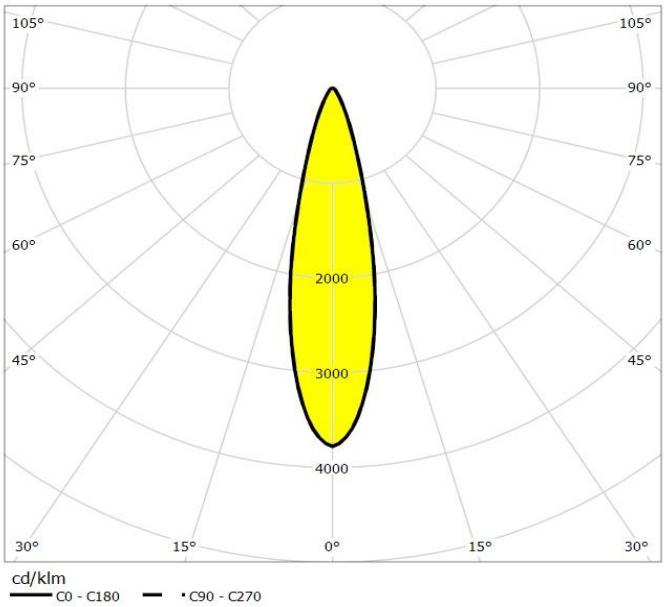

LED Superstar MR16 35 36D

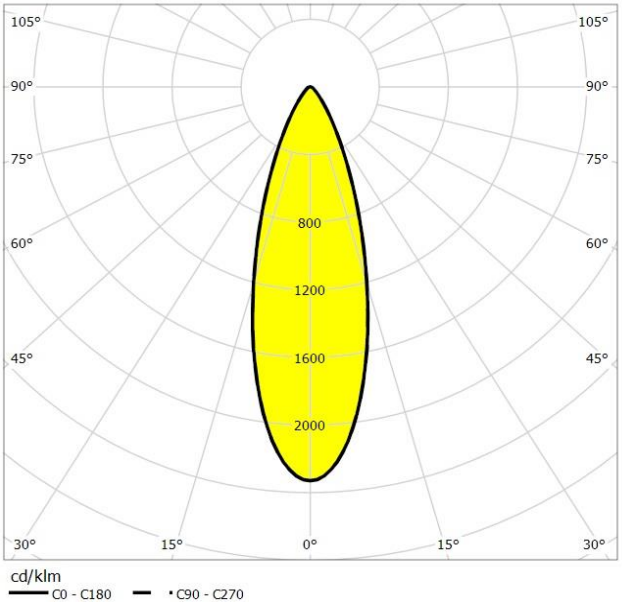

Disposal information

- Lamps with WEEE sign can be returned at specific collection points.
- LED lamps have to be disposed as special waste.

Product Information

LED Superstar MR16 35

Application information

• Hospitality
• Restaurant
• Residential
• Art galleries and museum
• Homes

Lamp conformity

•IEC 55015 (Limits and methods of measurement of radio disturbance characteristics of electrical lighting and similar equipment)
•IEC 60038 (IEC standard voltages)
•IEC 60061 (Lamp caps and holders)
•IEC 60357 (Tungsten halogen lamps (non vehicle) - Performance specifications)
•IEC 60432 (Incandescent lamps - Safety specifications)
•IEC 60630 (Maximum lamp outlines for incandescent lamps)
•IEC 60968 (Self-ballasted lamps for general lighting services - Safety requirements)
•IEC 60969 (Self-ballasted lamps for general lighting services - Performance requirements)
•EN 61000-2004/108/EC Electromagnetic compatibility
•IEC 61341 (Method of measurement of centre beam intensity and beam angle(s) of reflector lamps)
•IEC 61347-1 Lamp control gear - Safety requirements
•IEC 61547 (Equipment for general lighting purposes - EMC immunity requirements)
•EN 62471 Photo biological safety of lamps
•IEC 62612 (Self-ballasted LED-lamps for general lighting services > 50 V - Performance requirements)
•EN 874/2012 Energy labelling of electrical lamps and luminaires

Lamp Dimension

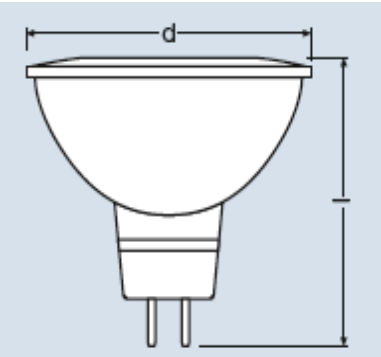

	MR16
D (mm)	49.6
l (mm)	53.7

Product Information

LED Superstar MR16 35

Compatibility performance with Transformer [4]

Legend

G / Good	GD / Good & Dark	FW / Flicker weakly	F / Flicker	FS / Flicker strongly	FD / Flicker & Dark	NGF / Not Good as Flicker	NG / not Good as light	N/A / Not applicable

	Transformer Inf					Lamp Qty /Nominal low voltage 1time				Lamp Qty /Nominal low voltage 0.9times				Lamp Qty /Nominal high voltage			
	Brand	Model	Type	Voltage	Wattage	1	2	3	4	1	2	3	4	1	2	3	4
1	OSRAM	HTM 70/230-240	HT	230-240, 50-60Hz	20-70W	G	G	G	G	G	G	G	G	G	G	G	G
2	OSRAM	HTM 105/230-240	HT	230-240, 50-60Hz	35-105W	G	G	G	G	G	G	G	G	G	G	G	G
3	OSRAM	ET-Parrot 70/220-240 I	ET	220-240, 50-60Hz	20-70W	G	G	G	G	G	G	G	G	G	G	G	G
4	OSRAM	ET-Parrot 105/220-240 I	ET	220-240, 50-60Hz	35-105W	G	G	G	G	G	G	G	G	G	G	G	G
5	OSRAM	ET-A 60/220-240	ET	220-240, 50-60Hz	20-60W	G	G	G	G	G	G	G	G	G	G	G	G
6	OSRAM	ET-LED 30/220-240	ET	220-240, 50-60Hz	2-30W	G	G	G	G	G	G	G	G	G	G	G	G
7	OSRAM	ET-REDBBACK 40VA/230-20	ET	230-240, 50-60Hz	10-40W	G	G	G	G	G	G	G	G	G	G	G	G
8	OSRAM	ET-Redback 60/230-240	ET	230-240, 50Hz	20-60W	G	G	G	G	G	G	G	G	G	G	G	G
9	OSRAM	ET-P 60/220-240 (Gen 2)	ET	220-240, 50-60Hz	20-60W	NG	G	G	G	NG	G	G	G	NG	G	G	G
10	OSRAM	HTB 70/220-240	HT	220-240, 50-60Hz	20-70W	G	G	G	G	G	G	G	G	G	G	G	G
11	OSRAM	HALOTRNIC HTN75/230-240 I	ET	230-240, 50-60Hz	20-75W	G	G	G	G	G	G	G	G	G	G	G	G
12	OSRAM	HTM 150/230-240	HT	230-240, 50-60Hz	50-150W	NG	G	G	G	NG	G	G	G	NG	G	G	G
13	OSRAM	HTL105/230-240	HT	230-240, 50-60Hz	35-105W	NG	G	G	G	NG	G	G	G	NG	G	G	G
14	OSRAM	Hti DALI 105/230-240 DIM	HTi	230-240, 50-60Hz	35-105W	NG	G	G	G	NG	G	G	G	NG	G	G	G
15	OSRAM	IZ-A50/240	ET	240,50-60Hz	50W	G	G	G	G	G	G	G	G	G	G	G	G
16	OSRAM	IZ-HALD50/220-240	ET	220-240, 50-60Hz	20-50W	G	G	G	G	G	G	G	G	G	G	G	G
17	OSRAM	HTB 105/220-240	HT	220-240, 50-60Hz	35-105W	G	G	G	G	G	G	G	G	G	G	G	G
18	OSRAM	ET-Parrot 150/220-240 I	ET	220-240, 50-60Hz	50-150W	NG	G	G	G	NG	G	G	G	NG	G	G	G
19	OSRAM	ET-ZE 60/220-240	ET	220-240, 50-60Hz	20-60W	G	G	G	G	G	G	G	G	G	G	G	G
20	OSRAM	ET-MZ 60	ET	230-240, 50-60Hz	20-61W	G	G	G	G	G	G	G	G	G	G	G	G

Symbol Description: ET / Electronic Transformer MT / Magnetic Transformer

[4] Typical valuesThe test results reflect the measurement of the individual devices that were used in tests. OSRAM does not take over any responsibility, warranty or liability that this results can also be achieved by using the devices under other conditions or when using successor models of the tested devices or different models of the same manufacturer.

The test results were achieved by using the above mentioned LED-lamp types. OSRAM does not take over any responsibility, warranty or liability that this results can also be achieved by using the devices under other conditions or when using other LED-lamp types.

LED lamps contain several electronic components. Under unfavorable conditions these can lead to acoustic noise. In case of resonance even low noise can cause audible effect. Possible factors influencing this are the installation, the design of the lamp holder and the luminaries (acoustic resonance effect) as well as the dimmer or the transformer (harmonics or electronic resonance).

Product Information

LED Superstar MR16 35

Compatibility performance with Transformer [4]

Legend

G / Good	GD / Good & Dark	FW / Flicker weakly	F / Flicker	FS / Flicker strongly	FD / Flicker & Dark	NGF/ Not Good as Flicker	NG / not Good as light	N/A / Not applicable

	Transformer Inf					Lamp Qty /Nominal low voltage 1time				Lamp Qty /Nominal low voltage 0.9times				Lamp Qty /Nominal high voltage			
	Brand	Model	Type	Voltage	Wattage	1	2	3	4	1	2	3	4	1	2	3	4
1	PHILIPS	ET-S 60 220-240	ET	220-240,50-60Hz	20-60W	G	G	G	G	G	G	G	G	G	G	G	G
2	Tridonic	ATCO Possum 60VA	ET Australia	230-240V,50-60Hz	20-60W	G	G	G	G	GD	G	G	G	G	G	G	G
3	PHILIPS	ET-E 60 220-240	ET	220-240,50-60Hz	20-60W	G	G	G	G	G	G	G	G	G	G	G	G
4	PHILIPS	ETK 50	ET	240,50-60Hz	50W	NG	G	G	G	NG	G	G	G	NG	G	G	G
5	Nelson	Tradesman 65	ET Australia	220-240V,50Hz	65W	G	G	G	G	G	G	G	G	G	G	G	G
6	nVc	ET60DS	ET	220,50Hz	35-60W	G	G	G	G	G	G	G	G	G	G	G	G
7	nVc	ET60E	ET	220,50Hz	20-60W	G	G	G	G	G	G	G	G	G	G	G	G
8	OSRAM	ET Z60	ET	220-240,50-60Hz	20-60W	G	G	G	G	G	G	G	G	G	G	G	G
9	OSRAM	ET-P 60/220-240 (Gen 2)	ET	220-240, 50-60Hz	20-60W	G	G	G	G	G	G	G	G	G	G	G	G
10	Tridonic	Speedy TE-0105 C101	ET Australia	230-240V,50-60Hz	35-105W	G	G	G	G	G	G	G	G	G	G	G	G
11	PAK三雄极光	PAK-070601	ET	220,50Hz	20-60W	G	G	G	G	G	G	G	G	G	G	G	G
12	Jindel	GET-0901	ET	220,50-60Hz	105W	NG	G	G	G	NG	G	G	G	NG	G	G	G
13	JOM嘉美	ET-60A	ET	220,50Hz	20-60W	G	G	G	G	G	G	G	G	G	G	G	G
14	OPPLE	DB602-220/12	ET	220,50Hz	20-60W	G	G	G	G	G	G	G	G	G	G	G	G
15	Nelson	Mtecougar60	ET Australia	230-240V,50Hz	60W	G	G	G	G	GD	G	G	G	G	G	G	G
16	Tridonic	ATCO Viper 60VA	ET Australia	230-240V,50-60Hz	20-60W	G	G	G	G	NG	G	G	G	G	G	G	G
17	SP ELECTRIC	TFE50/12	ET Thailand	220-230V, 50-60Hz	50W	G	G	G	G	G	G	G	G	G	G	G	G
18	월드스타 世界之星	JUI 1095-6002B	ET Korea	220V, 60Hz	50W	G	G	G	G	G	G	G	GD	G	G	G	G
19	BEC	MET50	ET Thailand	220-230V, 50-60Hz	50W	G	G	G	G	G	G	G	G	G	G	G	G
20	PHILIPS	ET-E10 LED	ET	220-240V, 50Hz	2-10W	G	G			G	G			G	G		
21	LUMIA 조명기구용킨버티	DKB-MR50H	ET Korea	220V, 60Hz	50W	G	G	G	G	G	G	G	G	G	G	G	G
22	OPECS/SAMSUNG	LED 12V 8W	ET Korea	220V, 60Hz	8W	G				G				G			

Symbol Description: ET / Electronic Transformer MT / Magnetic Transformer

[4] Typical valuesThe test results reflect the measurement of the individual devices that were used in tests. OSRAM does not take over any responsibility, warranty or liability that this results can also be achieved by using the devices under other conditions or when using successor models of the tested devices or different models of the same manufacturer.

The test results were achieved by using the above mentioned LED-lamp types. OSRAM does not take over any responsibility, warranty or liability that this results can also be achieved by using the devices under other conditions or when using other LED-lamp types.

LED lamps contain several electronic components. Under unfavorable conditions these can lead to acoustic noise. In case of resonance even low noise can cause audible effect. Possible factors influencing this are the installation, the design of the lamp holder and the luminaries (acoustic resonance effect) as well as the dimmer or the transformer (harmonics or electronic resonance).

Product Information

LED Superstar MR16 35 Connect with ET-A60+APAC/220-240

Compatibility performance with dimmer [5] (connect with up to 3 lamps)

Legend

L/Leading edge dimmer **T/**trailing edge dimmer U/Universal Dimmer

Limited Dimming Range (dim down to >20%) **Wide Dimming Range (dim down to < 20%)**

	Brand	Model	Load Range [W]	Type	Dimming range (%)	Flickering at low dim values
1	Clipsal	E30 (32V500M)	500VA	L	0% - 100%	
2	TCL-Legrand	V8051-M	40-630W	L	0% - 100%	
3	Panasonic	WEG57813K	40-300W	L	0% - 64.2%	
4	LUMEX	LOADSMART LT1D450LS	500VA	L	0% - 100%	
5	Clipsal	32E450TM	450W	T	0% - 100%	
6	Schneider-Clipsal	KB31RD400	400W	L	0% - 100%	
7	Clipsal	32E450UDM	450W	T	1.46% - 100%	
8	HPM	CAT400T HPM	400W	T	0% - 96.2%	
9	Anam / Legrand	ASW3000H	1000W	T	0% - 67.4%	
10	Diginet	DGLCDM400	400W	T	0% - 100%	
11	Clipsal	32ELEDM	400W	LED	0% - 100%	
12	Siemens	5UH8622-3NC01	25-400W	L	0% - 100%	
13	MK	S1535	1000W	L	0% - 100%	
14	Schneider-Electric	C460	400W	L	0% - 100%	
15	Schneider-Electric	U201DST600	40-600VA	L	14.17% - 100%	

[5] Typical valuesThe test results reflect the measurement of the individual devices that were used in tests. OSRAM does not take over any responsibility, warranty or liability that this results can also be achieved by using the devices under other conditions or when using successor models of the tested devices or different models of the same manufacturer.

The test results were achieved by using the above mentioned LED-lamp types. OSRAM does not take over any responsibility, warranty or liability that this results can also be achieved by using the devices under other conditions or when using other LED-lamp types.

LED lamps contain several electronic components. Under unfavorable conditions these can lead to acoustic noise. In case of resonance even low noise can cause audible effect. Possible factors influencing this are the installation, the design of the lamp holder and the luminaries (acoustic resonance effect) as well as the dimmer or the transformer (harmonics or electronic resonance).

Product Information

LED Superstar MR16 35 Connect with ET-A60+APAC/220-240

Compatibility performance with dimmer [5] (connect with up to 3 lamps)

Legend

L/Leading edge dimmer **T/**trailing edge dimmer U/Universal Dimmer

Limited Dimming Range (dim down to >20%) **Wide Dimming Range (dim down to < 20%)**

	Brand	Model	Load Range [W]	Type	Dimming range (%)	Flickering at low dim values
1	Clipsal	32E450LM	450W	L	0% - 100%	
2	Honyar	KT250	15-250W	L	0% - 100%	
3	Schneider-Electric	40600 RL	40-600W	L	0% - 100%	
4	Step	E033	45-300W	L	0% - 100%	
5	Bticino	AM5350	40-300W	L	0% - 100%	
6	Lutron	GRX-3106-T-AU-WH	2000W	L	32.29% - 100%	
7	Lutron	GXI-3104-T-CE-WH	2300W	T	0.69% - 100%	
8	Clipsal	31E2PUDM	10-350W	T	4.24% - 100%	
9	HPM	CAT400L	400W	L	0% - 94.2%	
10	Panasonic	WMS549	40-400W	L	0% - 100%	

[5] Typical valuesThe test results reflect the measurement of the individual devices that were used in tests. OSRAM does not take over any responsibility, warranty or liability that this results can also be achieved by using the devices under other conditions or when using successor models of the tested devices or different models of the same manufacturer.

The test results were achieved by using the above mentioned LED-lamp types. OSRAM does not take over any responsibility, warranty or liability that this results can also be achieved by using the devices under other conditions or when using other LED-lamp types.

LED lamps contain several electronic components. Under unfavorable conditions these can lead to acoustic noise. In case of resonance even low noise can cause audible effect. Possible factors influencing this are the installation, the design of the lamp holder and the luminaries (acoustic resonance effect) as well as the dimmer or the transformer (harmonics or electronic resonance).

Product Information

LED Superstar MR16 35 Connect with LED30+APAC/220-240

Compatibility performance with dimmer [5] (connect with up to 3 lamps)

Legend

L/Leading edge dimmer **T/**trailing edge dimmer U/Universal Dimmer

Limited Dimming Range (dim down to >20%) **Wide Dimming Range (dim down to < 20%)**

	Brand	Model	Load Range [W]	Type	Dimming range (%)	Flickering at low dim values
1	Clipsal	E30 (32V500M)	500VA	L	0% - 100%	
2	TCL-Legrand	V8051-M	40-630W	L	0% - 100%	
3	Panasonic	WEG57813K	40-300W	L	0% - 65.5%	
4	LUMEX	LOADSMART LT1D450LS	500VA	L	0% - 100%	
5	Clipsal	32E450TM	450W	T	0.69% - 100%	
6	Schneider-Clipsal	KB31RD400	400W	L	0% - 100%	
7	Clipsal	32E450UDM	450W	T	1.39% - 100%	
8	HPM	CAT400T HPM	400W	T	0.69% - 100%	
9	Anam / Legrand	ASW3000H	1000W	T	0% - 79.3%	
10	Diginet	DGLCDM400	400W	T	0% - 100%	
11	Clipsal	32ELEDM	400W	LED	0% - 100%	
12	Siemens	5UH8622-3NC01	25-400W	L	0.35% - 55%	
13	MK	S1535	1000W	L	0% - 100%	
14	Schneider-Electric	C460	400W	L	0% - 100%	
15	Schneider-Electric	U201DST600	40-600VA	L	10.97% - 100%	

[5] Typical valuesThe test results reflect the measurement of the individual devices that were used in tests. OSRAM does not take over any responsibility, warranty or liability that this results can also be achieved by using the devices under other conditions or when using successor models of the tested devices or different models of the same manufacturer.

The test results were achieved by using the above mentioned LED-lamp types. OSRAM does not take over any responsibility, warranty or liability that this results can also be achieved by using the devices under other conditions or when using other LED-lamp types.

LED lamps contain several electronic components. Under unfavorable conditions these can lead to acoustic noise. In case of resonance even low noise can cause audible effect. Possible factors influencing this are the installation, the design of the lamp holder and the luminaries (acoustic resonance effect) as well as the dimmer or the transformer (harmonics or electronic resonance).

Product Information

LED Superstar MR16 35 Connect with LED30+APAC/220-240

Compatibility performance with dimmer [5] (connect with up to 3 lamps)

Legend

L/Leading edge dimmer **T/**trailing edge dimmer U/Universal Dimmer

Limited Dimming Range (dim down to >20%) **Wide Dimming Range (dim down to < 20%)**

	Brand	Model	Load Range [W]	Type	Dimming range (%)	Flickering at low dim values
1	Clipsal	32E450LM	450W	L	0% - 100%	
2	Honyar	KT250	15-250W	L	0% - 100%	
3	Schneider-Electric	40600 RL	40-600W	L	0% - 100%	
4	Step	E033	45-300W	L	0% - 100%	
5	Bticino	AM5350	40-300W	L	0% - 100%	
6	Lutron	GRX-3106-T-AU-WH	2000W	L	31.53% - 100%	
7	Lutron	GXI-3104-T-CE-WH	2300W	T	0.69% - 100%	
8	Clipsal	31E2PUDM	10-350W	T	9.38% - 100%	
9	HPM	CAT400L	400W	L	0.69% - 100%	
10	Panasonic	WMS549	40-400W	L	0.83% - 100%	

[5] Typical valuesThe test results reflect the measurement of the individual devices that were used in tests. OSRAM does not take over any responsibility, warranty or liability that this results can also be achieved by using the devices under other conditions or when using successor models of the tested devices or different models of the same manufacturer.

The test results were achieved by using the above mentioned LED-lamp types. OSRAM does not take over any responsibility, warranty or liability that this results can also be achieved by using the devices under other conditions or when using other LED-lamp types.

LED lamps contain several electronic components. Under unfavorable conditions these can lead to acoustic noise. In case of resonance even low noise can cause audible effect. Possible factors influencing this are the installation, the design of the lamp holder and the luminaries (acoustic resonance effect) as well as the dimmer or the transformer (harmonics or electronic resonance).

Product Information

LED Superstar MR16 35 Connect with Redback40+APAC /220-240

Compatibility performance with dimmer [5] (connect with up to 3 lamps)

Legend

L/Leading edge dimmer **T/**trailing edge dimmer U/Universal Dimmer

Limited Dimming Range (dim down to >20%) **Wide Dimming Range (dim down to < 20%)**

	Brand	Model	Load Range [W]	Type	Dimming range (%)	Flickering at low dim values
1	Clipsal	E30 (32V500M)	500VA	L	0% - 100%	
2	TCL-Legrand	V8051-M	40-630W	L	0% - 100%	
3	Panasonic	WEG57813K	40-300W	L	0.69% - 84.1%	
4	LUMEX	LOADSMART LT1D450LS	500VA	L	0.69% - 100%	
5	Clipsal	32E450TM	450W	T	9.17% - 100%	
6	Schneider-Clipsal	KB31RD400	400W	L	0.28% - 100%	
7	Clipsal	32E450UDM	450W	T	12.85% - 100%	
8	HPM	CAT400T HPM	400W	T	3.19% - 100%	
9	Anam / Legrand	ASW3000H	1000W	T	0% - 100%	
10	Diginet	DGLCDM400	400W	T	0% - 100%	
11	Clipsal	32ELEDM	400W	LED	0.56% - 100%	
12	Siemens	5UH8622-3NC01	25-400W	L	2.22% - 100%	
13	MK	S1535	1000W	L	2.43% - 100%	
14	Schneider-Electric	C460	400W	L	0.69% - 100%	
15	Schneider-Electric	U201DST600	40-600VA	L	10.56% - 100%	

[5] Typical valuesThe test results reflect the measurement of the individual devices that were used in tests. OSRAM does not take over any responsibility, warranty or liability that this results can also be achieved by using the devices under other conditions or when using successor models of the tested devices or different models of the same manufacturer.

The test results were achieved by using the above mentioned LED-lamp types. OSRAM does not take over any responsibility, warranty or liability that this results can also be achieved by using the devices under other conditions or when using other LED-lamp types.

LED lamps contain several electronic components. Under unfavorable conditions these can lead to acoustic noise. In case of resonance even low noise can cause audible effect. Possible factors influencing this are the installation, the design of the lamp holder and the luminaries (acoustic resonance effect) as well as the dimmer or the transformer (harmonics or electronic resonance).

Product Information

LED Superstar MR16 35 Connect with Redback40+APAC /220-240

Compatibility performance with dimmer [5] (connect with up to 3 lamps)

Legend

L/Leading edge dimmer **T/**trailing edge dimmer U/Universal Dimmer

Limited Dimming Range (dim down to >20%) **Wide Dimming Range (dim down to < 20%)**

	Brand	Model	Load Range [W]	Type	Dimming range (%)	Flickering at low dim values
1	Clipsal	32E450LM	450W	L	0% - 100%	
2	Honyar	KT250	15-250W	L	0.69% - 100%	
3	Schneider-Electric	40600 RL	40-600W	L	14.79% - 100%	
4	Step	E033	45-300W	L	0.35% - 100%	
5	Bticino	AM5350	40-300W	L	0% - 100%	
6	Lutron	GRX-3106-T-AU-WH	2000W	L	45.35% - 100%	
7	Lutron	GXI-3104-T-CE-WH	2300W	T	4.51% - 100%	
8	Clipsal	31E2PUDM	10-350W	T	9.86% - 100%	
9	HPM	CAT400L	400W	L	4.31% - 100%	
10	Panasonic	WMS549	40-400W	L	0% - 100%	

[5] Typical valuesThe test results reflect the measurement of the individual devices that were used in tests. OSRAM does not take over any responsibility, warranty or liability that this results can also be achieved by using the devices under other conditions or when using successor models of the tested devices or different models of the same manufacturer.

The test results were achieved by using the above mentioned LED-lamp types. OSRAM does not take over any responsibility, warranty or liability that this results can also be achieved by using the devices under other conditions or when using other LED-lamp types.

LED lamps contain several electronic components. Under unfavorable conditions these can lead to acoustic noise. In case of resonance even low noise can cause audible effect. Possible factors influencing this are the installation, the design of the lamp holder and the luminaries (acoustic resonance effect) as well as the dimmer or the transformer (harmonics or electronic resonance).

Product Information

LED Superstar MR16 35 Connect with Redback60+APAC /220-240

Compatibility performance with dimmer [5] (connect with up to 3 lamps)

Legend

L/Leading edge dimmer **T/**trailing edge dimmer U/Universal Dimmer

Limited Dimming Range (dim down to >20%) **Wide Dimming Range (dim down to < 20%)**

	Brand	Model	Load Range [W]	Type	Dimming range (%)	Flickering at low dim values
1	Clipsal	E30 (32V500M)	500VA	L	0% - 100%	
2	TCL-Legrand	V8051-M	40-630W	L	0% - 100%	
3	Panasonic	WEG57813K	40-300W	L	0.21% - 83.4%	
4	LUMEX	LOADSMART LT1D450LS	500VA	L	0.42% - 100%	
5	Clipsal	32E450TM	450W	T	6.53% - 100%	
6	Schneider-Clipsal	KB31RD400	400W	L	0% - 100%	
7	Clipsal	32E450UDM	450W	T	10.56% - 100%	
8	HPM	CAT400T HPM	400W	T	1.39% - 100%	
9	Anam / Legrand	ASW3000H	1000W	T	0.35% - 100%	
10	Diginet	DGLCDM400	400W	T	0% - 100%	
11	Clipsal	32ELEDM	400W	LED	0.69% - 100%	
12	Siemens	5UH8622-3NC01	25-400W	L	3.13% - 100%	
13	MK	S1535	1000W	L	0.69% - 100%	
14	Schneider-Electric	C460	400W	L	0.69% - 100%	
15	Schneider-Electric	U201DST600	40-600VA	L	7.78% - 100%	

[5] Typical valuesThe test results reflect the measurement of the individual devices that were used in tests. OSRAM does not take over any responsibility, warranty or liability that this results can also be achieved by using the devices under other conditions or when using successor models of the tested devices or different models of the same manufacturer.

The test results were achieved by using the above mentioned LED-lamp types. OSRAM does not take over any responsibility, warranty or liability that this results can also be achieved by using the devices under other conditions or when using other LED-lamp types.

LED lamps contain several electronic components. Under unfavorable conditions these can lead to acoustic noise. In case of resonance even low noise can cause audible effect. Possible factors influencing this are the installation, the design of the lamp holder and the luminaries (acoustic resonance effect) as well as the dimmer or the transformer (harmonics or electronic resonance).

Product Information

LED Superstar MR16 35 Connect with Redback60+APAC /220-240

Compatibility performance with dimmer [5] (connect with up to 3 lamps)

Legend

L/Leading edge dimmer **T/**trailing edge dimmer U/Universal Dimmer

Limited Dimming Range (dim down to >20%) **Wide Dimming Range (dim down to < 20%)**

	Brand	Model	Load Range [W]	Type	Dimming range (%)	Flickering at low dim values
1	Clipsal	32E450LM	450W	L	0% - 100%	
2	Honyar	KT250	15-250W	L	0.69% - 100%	
3	Schneider-Electric	40600 RL	40-600W	L	12.85% - 100%	
4	Step	E033	45-300W	L	0% - 100%	
5	Bticino	AM5350	40-300W	L	0% - 100%	
6	Lutron	GRX-3106-T-AU-WH	2000W	L	45.35% - 100%	
7	Lutron	GXI-3104-T-CE-WH	2300W	T	4.51% - 100%	
8	Clipsal	31E2PUDM	10-350W	T	10.35% - 100%	
9	HPM	CAT400L	400W	L	3.33% - 100%	
10	Panasonic	WMS549	40-400W	L	0% - 100%	

[5] Typical valuesThe test results reflect the measurement of the individual devices that were used in tests. OSRAM does not take over any responsibility, warranty or liability that this results can also be achieved by using the devices under other conditions or when using successor models of the tested devices or different models of the same manufacturer.

The test results were achieved by using the above mentioned LED-lamp types. OSRAM does not take over any responsibility, warranty or liability that this results can also be achieved by using the devices under other conditions or when using other LED-lamp types.

LED lamps contain several electronic components. Under unfavorable conditions these can lead to acoustic noise. In case of resonance even low noise can cause audible effect. Possible factors influencing this are the installation, the design of the lamp holder and the luminaries (acoustic resonance effect) as well as the dimmer or the transformer (harmonics or electronic resonance).